12~24VDC

SDA100W

100W Siren Amplifier

FEATURES

- 100W siren amplifier for single speaker (11Ohm) setup.
- Class D amplifier for low amp draw, clean tone and compact size design.
- 12-24VDC multi-voltage.
- Siren Interlock input that disable siren activation without primary warning.
- Selectable tone groups to meet various Euro country standards.
- Positive or negative inputs for Horn Ring Transfer input.
- Radio Re-Broadcasting (RRB) for audio replay.
- Unique MIX TONE function provides “Dual Speaker Effect” with only single speaker.
- “Record-n-Play” that records voice and play instantly without using a memory card.
- Optional Microphone and PA function with handheld microphone.
- Meets ECE R10 standard; documentation available upon request.
- Reverse Polarity Protection.

SPECIFICATIONS

Compliance: ECE R10

Input Voltage: 12-24 VDC

Siren Output Power: 100W

Output Load: 100W-ACR 11Ω

Siren Frequency: 759Hz - 1592Hz

Max. Current: 9A @ 12VDC / 4.5A @ 24VDC

Standby Current:
(w/o IGN wire) 0.04 mA @12VDC / 0.1 mA @24VDC
(w/ IGN wire) 0.36 A @12VDC / 0.18 A @24VDC

Operating Temp: -20°C to 50°C

I/O:
- +VDC,
- -GND,
- Speaker Output+-
- IGN (Ignition)
- Siren Tone,
- Siren Interlock
- Radio Re-Broadcasting,
- Day/Night Mode
- Radio Audio Input +-
- Record-n-Play
- Horn Ring Transfer Input

DIMENSIONS

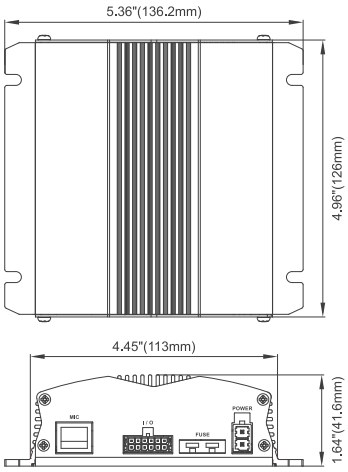

SELECTABLE TONE GROUP

No.	COUNTRY	TONE	FREQUENCY(Hz)	CYCLE/MINUTE
1	USA/ UK INTERNATIONAL	STANDARD 1	763 ~ 1594	WAIL 12 C/M
			763 ~ 1594	YELP 157 C/M
			450-598	TWO TONE 40 C/M
2	FRANCE	GENDAMERIE	434-729	TWO TONE 54 C/M
3	FRANCE	POLICE	434-581	TWO TONE 54 C/M
4	FRANCE	AMBULANCE	420-515-420	TWO TONE 30 C/M
5	FRANCE	POMPIERS	434-487	TWO TONE 27 C/M
6	FRANCE	UMH	434-649	TWO TONE 54 C/M
7	GERMANY	CITY (STADT)	432-574	TWO TONE 40 C/M
		COUNTRY (LAND)	362-483	TWO TONE 40 C/M
8	AUSTRIA	POLICE	431-574	TWO TONE 25 C/M
9	AUSTRIA	AMBULANCE	523-393	TWO TONE 17 C/M
10	AUSTRIA	FIRE BRIGADE	393-523	TWO TONE 17 C/M
11	AUSTRIA	MAGISTRATE	523-393	TWO TONE 18 C/M
12	ITALY	POLICE	465-621	TWO TONE 20 C/M
13	ITALY	AMBULANCE	392-657-392-657	TWO TONE 20 C/M
14	ITALY	AMBULANCE 2	763 ~ 1594	WAIL 12 C/M
			763 ~ 1594	YELP 157 C/M
			392-657-392-657	TWO TONE 20 C/M
15	USA/ UK INTERNATIONAL	STANDARD 2	763-1594	WAIL 12 C/M
			763-1594	YELP 157 C/M
			450-598	TWO TONE 40 C/M
16	NETHERLANDS	POLICE	373-501	TWO TONE 33 C/M
				TWO TONE 66 C/M
17	USA/ UK INTERNATIONAL	STANDARD 3	763 ~ 1594	WAIL 12 C/M
			763 ~ 1594	YELP 157 C/M
			450-598	TWO TONE 40 C/M
18	USA/ UK INTERNATIONAL	STANDARD 4	763 ~ 1594	WAIL 12 C/M
			763 ~ 1594	YELP 157 C/M
19	USA/ UK INTERNATIONAL	STANDARD 5	763 ~ 1594	WAIL 12 C/M
			763 ~ 1594	YELP 157 C/M

PART NO.

- **S007-10030-000** (R10_Amplifier Only)
- **S007-11030-000** (R10_Amplifier & Handheld Mic Set)

COMPATIBLE SPEAKER

- **JS100-C1 Compact Siren Speaker**

Rev.230802 © 2023 Juluen

JULUEN